الصفحة	الامتحان الوطني الموحد للبكالوريا	المملكة المغربية وزارة التربية الوطنية والتكوين المهني والتعليم العالي والبحث العلمي
1 / 6	المسالك الدولية – خيار أنجليزية	
♦♦♦	**الدورة العادية 2019**	المركز الوطني للتقويم والامتحانات والتوجيه
	- الموضوع -	
	♣♣♣♣♣♣♣♣♣♣♣♣♣♣♣♣♣♣♣♣ NS34E	

المادة	علوم الحياة والأرض	مدة الانجاز	3
الشعبة أو المسلك	شعبة العلوم التجريبية : مسلك علوم العلوم الفيزيائية – خيار أنجليزية	المعامل	5

Candidates may use non-programmable calculators

Section I : Knowledge Retrieval (5 pts)

I. **Define** the following notions: - overlap – accretionary prism **(1pt)**

II. For each of the propositions numbered from 1 to 4, there is only one correct suggestion in each set. **Copy down** these pairs (1 ; ..), (2 ; ..), (3 ; ..), (4 ; ..), and **match** each number with its corresponding letter. **(2 pts)**

1. The cooling of magma on the surface in the subduction zones leads to the formation of:

a- andesite having a granular structure.
b- peridotite having a microlitic structure.
c- andesite having microlitic structure.
d- peridotite having a granular structure.

2- The Gneiss rock is characterized by a :

a- granular structure
b- foliation structure.
c- microlitic structure.
d- schistosity structure

3. subduction zones are characterized by:

a- high pressure and high temperature.
b- low pressure and high temperature.
c- high pressure and low temperature.
d- low pressure and low temperature.

4. Oman mountain chain is formed following a:

a- displacement of a continental lithosphere above an oceanic lithosphere.
b- displacement of an oceanic lithosphere above a continental lithosphere.
c- burial of an oceanic lithosphere under an oceanic lithosphere.
d- burial of a an oceanic lithosphere under a continental lithosphere.

III. Copy down on your exam sheet the number corresponding to each proposition and **write** whether the statement is **"true"** or "**false"**. **(1 pt)**

1 - The folds and the reverse faults are tectonic deformations characterizing the divergence zones of the lithospheric plates.

2- Subduction zones are characterized by negative thermal anomalies.

3- Ophiolite complex has a petrographic composition similar to that of the oceanic lithosphere.

4- Andesite is a magmatic rock resulting from in-depth cooling and solidification of magma.

IV. The document on the right-hand side is a diagram of one of the convergence zones between two lithospheric plates.

Give the name of the phenomenon represented in the document and the names of elements 1, 2 and 3. **(1pt)**

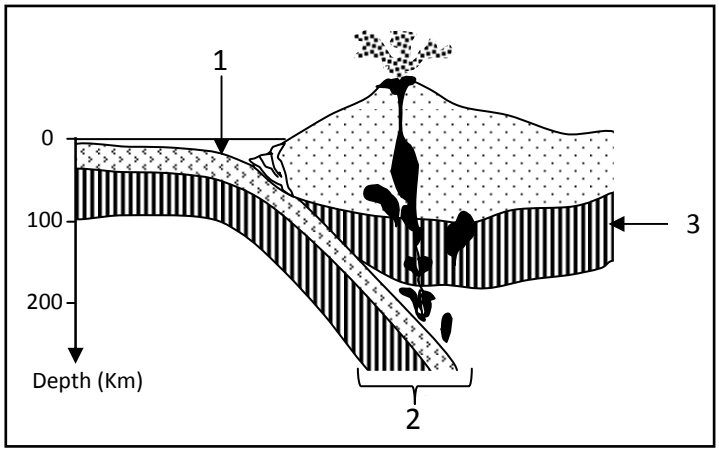

Section II : Scientific reasoning and communication in graphic and written modes (15pts)

Exercise 1 (5 pts)

In order to study the relationship between the reactions responsible for oxygen consumption and the release of energy at the muscle level, the following data are suggested:

Physical performances of athletes exercising in areas of low altitude are weak during competitions taking place in areas of high altitude. To determine the causes of the diminution in this physical performance, a study has been conducted to follow the evolution of marathon records in relation to altitude above sea level. The table in Document **1** shows the results obtained.

	Marathon of Rabat (Morocco)	Marathon of Colorado (USA)	Marathon of Mexico city (Mexico)	Marathon of La Paz (Bolivia)
Altitude above sea level in meter (m)	29	1823	2240	3658
Oxygen (O_2) partial pressure (mmHg)	159	125	110	97
Registered record	2h :10min : 36s	2h :18min : 06s	2h :19min : 24s	2h :26min : 00s

Document 1

1- Based on Document **1**, **describe** the changes in the registered records in relation to altitude above sea level. **(0.5pt)**

To illustrate the relationship between altitude above sea level and the low physical performance of marathon athletes, we suggest document **2**, which shows the effect of altitude on the quantity of oxygen (O_2) supplying the cells.

2. Based on Documents 1 and 2, **suggest** a hypothesis to explain the relationship between altitude and low physical performance of marathon athletes. **(0.5pt)**

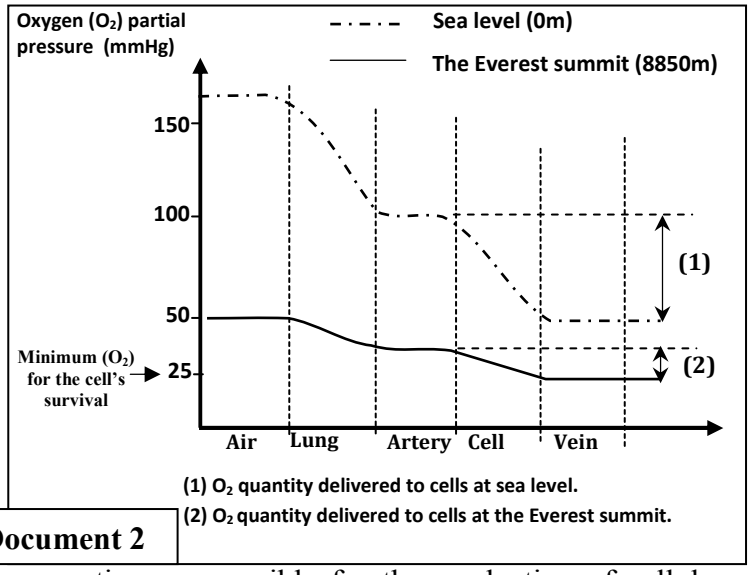

Document 2

To determine the role of oxygen (O_2) in respiratory reactions responsible for the production of cellular energy (ATP), we realize the following experiment: a mitochondrial suspension has been placed in a medium rich in oxygen supplemented with reduced compounds (RH_2), ADP and Pi. The follow-up of the evolution of the oxygen quantity and ATP in that medium has allowed to record the following results as shown in document **3**. Document **4** shows the respiratory chain responsible for ATP production at inner mitochondrial membrane level.

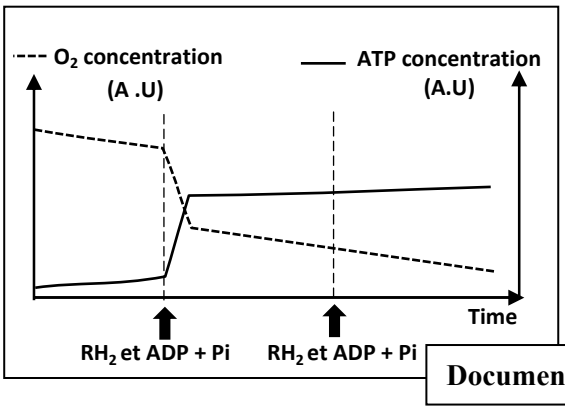

Document 3

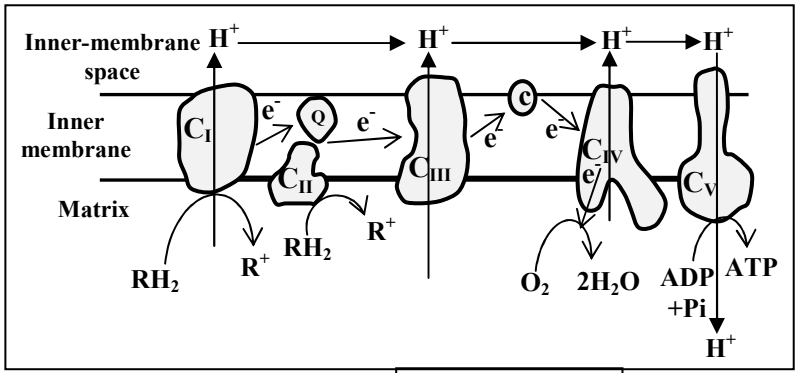

Document 4

3. Based on documents **3** and **4**, **show** the relationship between oxygen and cellular energy production (ATP). **(1.25pts)**

4. Based on the previous data, **verify** the hypothesis suggested in your answer to question 2. **(0 .75pt)**

In order to make up for the low physical performance of athletes in sports competitions at high altitude, coaches have recourse to training athletes physically in areas at high altitude for three weeks before the competitions. Document **5** presents the results of analyses carried out on an athlete before and after training in the La Paz region in Bolivia.

Variables	Before training in the La Paz region in Bolivia.	After training in the La Paz region in Bolivia.
Number of red blood cells per mm^3 of blood	$4.58\ 10^6$	$5.17\ 10^6$
Number of white blood cells per mm^3 of blood	7400	8400
Hemoglobin in 100 ml of blood	13.5g	15.9g

NB: The hemoglobin is a protein found in red blood cells and plays an important role in transmitting oxygen to body cells.

Document 5

5. a- Compare the variables indicated in document **5** in the athlete before and after training in the La Paz region in Bolivia. **(0.5pt)**

b- Based on your knowledge and previous data, **explain** the impact of sport training at high altitude regions on the increase of physical performance of athletes. **(1.5pts)**

Exercise 2 : (2,5 pts)

Genetic mutations are among the causes of cancer in humans. Researchers estimate that about 5% to 10% of cancer cases are of genetic origin.

To determine the genetic origin of some cases of breast cancer in women, it is suggested to study the following data:

Researchers have shown a relationship between the BRCA1 gene on chromosome 17 and breast cancer in women. Document **1** shows the percentage change (according to age) in breast cancer in women having a normal allele and women having a mutant allele of BRCA1gene.

Document 1

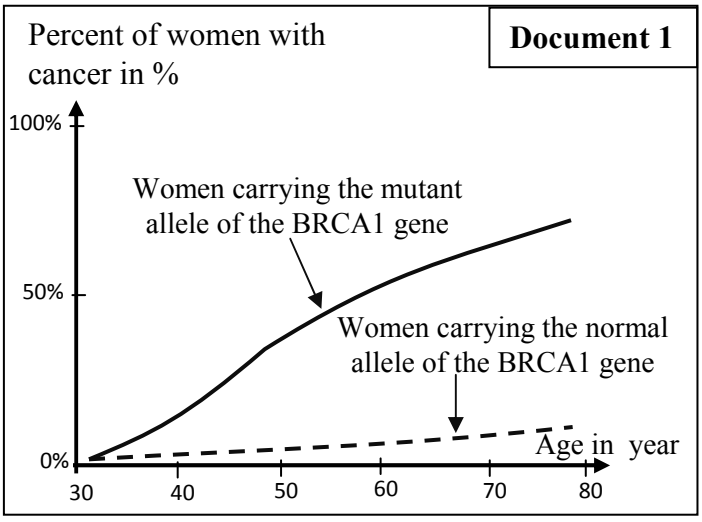

1. Compare the percentage of breast cancer in women, those having normal allele and those having mutant allele (Document **1**), by **highlighting** the relationship between the BRCA1 gene and breast cancer. **(0.5pt)**

The BRCA gene controls the synthesis of a "BRCA1" protein involved in DNA repair. Document **2** shows the mechanism leading to breast cancer in women under the influence of X-rays and ultraviolet rays.

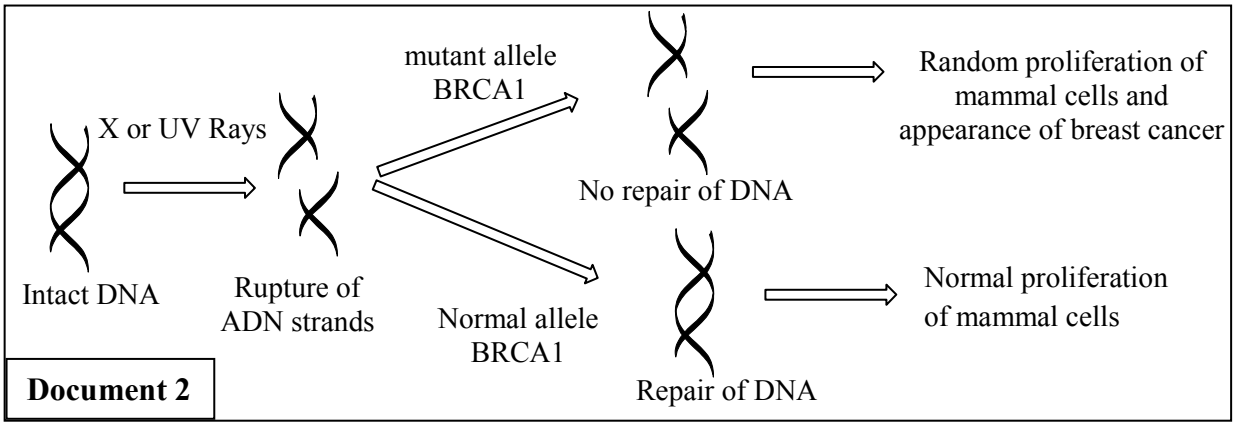

Document 2

2. Based on the data in Document 2, **explain** the percentage change in breast cancer recorded in Document **1** in women having the mutant allele of BRCA1 gene. **(0.5pt)**

Document **3** shows part of the transcribed strand of the two normal and mutant alleles of the gene responsible for the synthesis of the BRCA1 protein. Document **4** presents the table of the genetic code :

Number of nucleotide triplets : 368 369 370 371 372 373 374 375

Part of the normal allele (BRCA1) : CTT CTA CAA GGA ACC TAT TGT GAT TT..

Part of the mutant allele (BRCA1) : CTT CTA CAA GGA ACC TAT TTG ATT T..

Document 3

⟶ ***Reading direction***

2nd Base in codon / 1st Base in codon	U		C		A		G		3rd Base in codon
U	UUU	**Phe**	UCU	**Ser**	UAU	**Tyr**	UGU	**Cys**	**U**
	UUC		UCC		UAC		UGC		**C**
	UUA	**Leu**	UCA		**UAA**	**STOP**	**UGA**	**STOP**	**A**
	UUG		UCG		**UAG**		UGG	**Trp**	**G**
C	CUU	**Leu**	CCU	**Pro**	CAU	**His**	CGU	**Arg**	**U**
	CUC		CCC		CAC		CGC		**C**
	CUA		CCA		CAA	**Gln**	CGA		**A**
	CUG		CCG		CAG		CGG		**G**
A	AUU	**Ile**	ACU	**Thr**	AAU	**Asn**	AGU	**Ser**	**U**
	AUC		ACC		AAC		AGC		**C**
	AUA		ACA		AAA	**Lys**	AGA	**Arg**	**A**
	AUG	**Met**	ACG		AAG		AGG		**G**
G	GUU	**Val**	GCU	**Ala**	GAU	**Ac.asp**	GGU	**Gly**	**U**
	GUC		GCC		GAC		GGC		**C**
	GUA		GCA		GAA	**Ac.glu**	GGA		**A**
	GUG		GCG		GAG		GGG		**G**

Document 4

3. Based on documents **3** and **4**, **determine** the amino acid sequence of the BRCA1 protein in the normal allele case and the mutant allele case. **(0.5pt)**

4. Based on previous data, **explain** the genetic origin of breast cancer in women. **(1 pt)**

Exercise 3 : (2.5 pts)

Certain varieties of flax are resistant to two strains of fungi, strain C_{24} and strain C_{22}.
To understand the mode of transmission of the two hereditary traits in the flax plant, we suggest the exploitation of the results of the two following crosses:

- First cross between two pure lineages of the flax plant: the ***"770B"*** lineage of the flax plant is resistant to strain C_{24} and sensitive to strain C_{22}, and the **"*Bombay*"** lineage is sensitive to strain C_{24} and resistant to strain C_{22}. The first generation obtained (F_1) is composed of individuals who are all resistant to strain C_{24} and strain C_{22} of fungi.

- Second cross between F_1 individuals: This cross gives a generation F2 composed of:

- 110 flax plants resistant to strain C_{24} and resistant to strain C_{22};
- 37 flax plants resistant to strain C_{24} and sensitive to strain C_{22};
- 36 flax plants sensitive to strain C_{24} and resistant to strain C_{22};
- 11 flax plants sensitive to strain C_{24} and sensitive to strain C_{22};

1. Based on the results of the two crosses determine the mode of transmission of the two hereditary traits studied. **(0.75pt)**

*Use the symbols **R** and **r** for the character "resistance to strain C_{24} " and the symbols **D** and **d** for the character " resistance to strain C_{22} ".*

2. Interpret and **use** Punnett square to **explain** the results obtained in the second cross.**(1.25pts)**

- Third cross: between a double recessive flax plant and a flax plant of generation F_2, which is resistant to both strains C_{24} and C_{22}. This cross gives a generation composed of:

- 50 flax plants resistant to strain C_{24} and resistant to strain C_{22};
- 48 flax plants resistant to strain C_{24} and sensitive to strain C_{22}.

3. Based on the results of the third cross, **determine** the genotype of flax plant of the generation F_2 resistant to both fungal strains C_{24} and C_{22}. (**0.5 pt)**

Exercise 4 (5 pts)

The Agadir Bay opens on the plain of Souss in the south of Morocco, where a modern agriculture of industrial type has been developed. The intense practice of agriculture in the region has been accompanied by a significant use of pesticides to protect crops with a view of increasing yields. Although they have beneficial effects on crops protection, these pesticides have adverse effects on human and environmental health.

In order to assess the level of pesticide contamination in the Agadir Bay ecosystems, researchers from the Agadir Faculty of Science have, during the years 2009 and 2010, conducted chemical analyses on water samples taken from two stations : Station1(S1: *Massa river estuary*) and Station 2 (S2: *Anza beach*) - document **1**. The graphs in document **2** show the results of these analyses. ***NB:*** *the year 2010 witnessed significant rainfall which favored intense agricultural activity.*

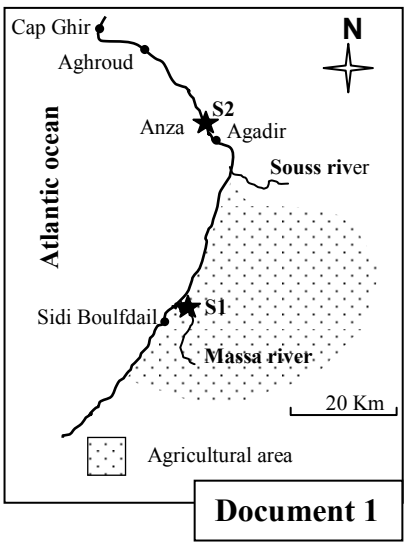

Document 1

Document 2

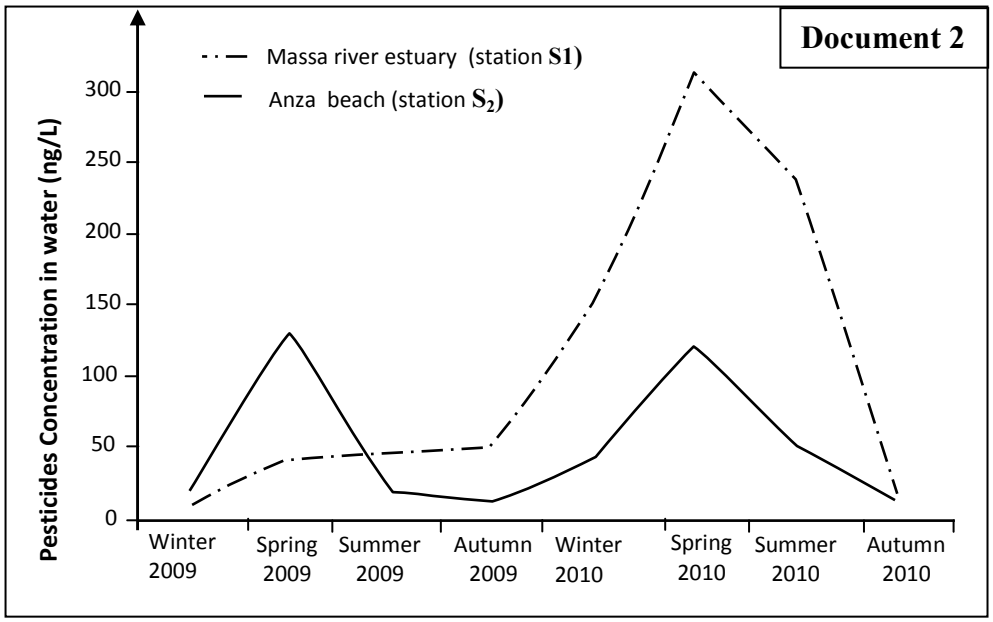

1. By exploiting documents **1** and **2**:

a- Describe the evolution of pesticide concentration in Station1 during the years 2009 and 2010. **(1pt)**

b- Compare the degree of water pollution in stations S1 and S2 during 2010 seasons, and **explain** the difference recorded. **(0.75pt)**

To determine the degree of contamination of living organisms in the ecosystems of the Agadir Bay by a type of a pesticide called *Endosulfans*, a contamination monitoring by this pesticide in a bivalve mollusk (*perna perna*), which feeds through sea water filtration, has been realized in Anza beach during summer and autumn of the year 2010. Document **3** presents the results obtained.

Document 3

Seasons	Summer 2010	Autumn 2010
Pesticide concentration in the waters of Anza beach (ng /L)	0,80 ng /L	0,32 ng /L
Pesticide concentration in the bivalve mollusk tissue (ng /Kg)	1920 ng /Kg	985 ng /Kg

2. **Based** on Document **3**, **compare** the recorded concentration of pesticides in the waters of Anza beach with the concentration recorded in bivalve mollusc tissue during summer and autumn of the year 2010, and **explain** the difference observed. **(0.75pt)**

In order to protect ecosystems from the harmful effects of pesticides used in agriculture, an experiment has been conducted by researchers to observe the effects of two different methods of treatment against a cochineal (an insect) that destroys orange trees.

- The first method is to use a chemical insecticide, DDT, on a field of orange trees each year.

- The second method is to release the predator insects of the cochineal insect on another field of orange trees. The obtained results are presented in Document **4**.

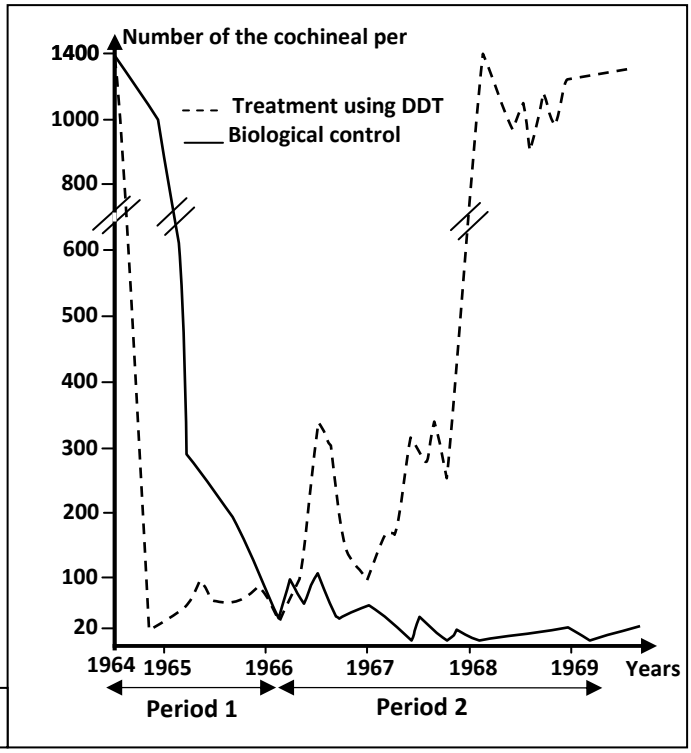

Document 4

3. Based on document **4** and your knowledge.

a- Determine the more effective treatment during period **1** and period **2. Justify** your answer. **(1pt)**

b- Explain the evolution of the number of cochineal in the case of DDT treatment during the period 2. **(0.5 pt)**

4. Based on your previous answers and your knowledge, **deduce** the appropriate method for treatment of the orange trees and the preservation of the Agadir Bay ecosystems. **Justify** your answer. **(1pt)**

GOOD LUCK!