الامتحان الوطني الموحد للبكالوريا
المسالك الدولية – خيار أنجليزية
الدورة العادية 2019
-الموضوع-

♣♣♣♣♣♣♣♣♣♣♣♣♣♣♣♣♣♣♣♣ NS27E

المركز الوطني للتقويم والامتحانات والتوجيه

المادة	الفيزياء والكيمياء	مدة الانجاز	3
الشعبة أو المسلك	شعبة العلوم التجريبية : مسلك علوم الحياة والأرض – خيار أنجليزية	المعامل	5

➢ **Programmable scientific calculator is not allowed.**

➢ **Give the literal expressions before every numerical application.**

This exam paper consists of four exercises: one in chemistry and three in physics.

Chemistry (7 points)	• **Aqueous solution of methanoic acid**	**7 points**
Physics (13 points)	**Exercise 1: Age of a groundwater**	**2,5 points**
	Exercise 2: • **RC dipole** • **RLC series circuit**	**5,5 points**
	Exercise 3: • **Study of the motion of a skier** • **Study of an oscillating system**	**5 points**

scale	Subject

Chemistry (7 points): Aqueous solution of methanoic acid

Methanoic acid $HCOOH$ ***, usually named formic acid, is a corrosive and piquant liquid that exist naturally in the organism of the red ants.***

This exercise aims at:

- ***Studying an aqueous solution of methanoic acid;***
- ***The titration of an aqueous solution of methanoic acid;***
- ***Comparison of the behaviour of two acids.***

<u>Part 1:</u> ***Study of an aqueous solution of methanoic acid***

We have an aqueous solution (S_A) of methanoic acid $HCOOH_{(aq)}$ of volume $V_A = 1L$, of molar concentration $C_A = 0{,}10\ mol.L^{-1}$ and $pH = 2{,}4$.

0,5 **1.** Define an acid according to Brønsted.

0,5 **2.** Write the chemical equation moulded the transformation between the methanoic acid and water.

0,5 **3.** Copy on your answer sheet the advancement table and complete it.

Chemical equation		.....			
State	Advancement of the reaction (mol)	Amount of matter (mol)			
Initial state	0	.....	.....	.....	.....
Intermediate state	x	.....	.....	.....	.....
Final state	x_f	.....	.....	.....	.....

0,5 **4.** Calculate x_f, the final advancement of this transformation.

0,5 **5.** Calculate the rate of reaction τ of this reaction. Conclude.

1 **6.** Show that the quotient of reaction at the equilibrium of the chemical system is written as: $Q_{r,eq} = \dfrac{10^{-2pH}}{C_A - 10^{-pH}}$. Calculate its value.

0,25 **7.** Deduce the value of the equilibrium constant K of the equation of reaction.

<u>Part 2</u>: Titration of an aqueous solution of methanoic acid

To verify the value of the molar concentration C_A of the solution (S_A), we realise an acid-base titration. In a beaker, we pour a volume $V_A = 20{,}0mL$ of this solution and we progressively add an aqueous solution (S_B) of sodium hydroxide $Na^+_{(aq)} + HO^-_{(aq)}$ of molar concentration $C_B = 0{,}25\ mol.L^{-1}$. The coordinates of the equivalence point are: ($V_{B,E} = 8{,}0mL$; $pH_E = 8{,}2$).

The experimental apparatus used to realise this titration is shown in figure beside.

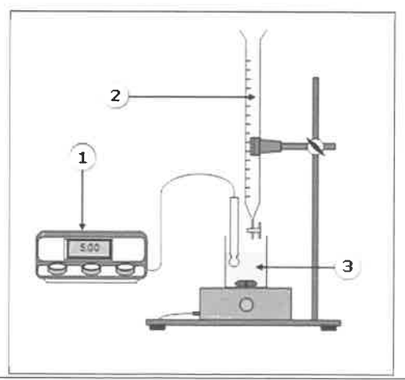

0,5 **1.** Give the name of the elements corresponding to the numbers in the figure.

0,5 **2.** Write the chemical equation of the reaction produced between methanoic acid $HCOOH_{(aq)}$ and hydroxide ions $HO^-_{(aq)}$ during titration, knowing that it is total.

0,5 **3.** Verify the value of C_A.

0,25 **4.** From the two pH-indicators below, which one is the most suitable with this titration? Justify.

pH-indicator	Acid colour	range	Basic colour
Cresol red	Yellow	7,2 - 8,8	Red
Alizarin	Red	11,0 – 12,4	purple

0,5 **5.** For a volume poured $V_B = \frac{V_{B,E}}{2}$ of the solution (S_B), the pH of the mixture in the beaker is $pH = 3,8$ and $\left[HCOOH_{(aq)}\right] = \left[HCOO^-_{(aq)}\right]$.

Calculate the acidity constant K_A of the pair $(HCOOH_{(aq)} / HCOO^-_{(aq)})$

Part 3: behaviour of two acids in aqueous solution

We consider a second solution (S') of propanoic acid C_2H_5COOH of molar concentration $C'_A = 0,10\ mol.L^{-1}$. The value of the rate of final advancement of the reaction of propanoic acid and water is $\tau' = 1,16.10^{-3}$.

0,5 **1.** Comparing τ' and τ, the rate of final advancement of the reaction of methanoic acid and water, which acid is the most dissolved in solution.

0,5 **2.** Compare the acidity constants $K_A(HCOOH_{(aq)} / HCOO^-_{(aq)})$ and $K_A(C_2H_5COOH_{(aq)} / C_2H_5COO^-_{(aq)})$.

Physics (13 points)

Exercise 1 (2,5 points):Age of a groundwater

The chlorine exists in nature under the form of 3 isotopes: Chlorine 35 $(^{35}_{17}Cl)$***, chlorine 36*** $(^{36}_{17}Cl)$ ***and chlorine 37*** $(^{37}_{17}Cl)$.

In the surface water (oceans, rivers…), chlorine 36 is renewed and its content is supposed constant. In the case of phreatic table (groundwater), the renewal does not exist and the portion of chlorine 36 decreases during time.

Data:

Nucleus or particle	Electrons	Chlorine $^{36}_{17}Cl$	Aragon $^{36}_{18}Ar$
Mass in (u)	0,000549	35,968312	35,967545
$1u = 931,5\ MeV.c^{-2}$	Radioactivity constant of chlorine 36: $\lambda = 2,30.10^{-6}\ ans^{-1}$		

Nucleus	$^{35}_{17}Cl$	$^{36}_{17}Cl$	$^{37}_{17}Cl$
Energy of liaison by nucleons $\frac{E_\ell}{A}(MeV / nucleon)$	8,5178	8,5196	8,5680

0,25 **1.** Copy on your answer sheet the number of the question and write the letter corresponding to the right option (A, B, C or D).

The composition of the nucleus of chlorine $^{35}_{17}Cl$ is:

A	17 protons and 35 neutrons
B	18 protons and 17 neutrons
C	17 protons and 18 neutrons
D	18 protons and 35 neutrons

0,5 **2.** Determine, by justification, the most stable nucleus from $^{35}_{17}Cl$, $^{36}_{17}Cl$ and $^{37}_{17}Cl$.

3. The chlorine 36 is radioactive and releases, by disintegration, a nucleus of argon $^{36}_{18}Ar$.

0,5 **3.1** Write the equation of disintegration of a nucleus of chlorine 36, and identify the type of this disintegration.

0,5 **3.2** Calculate, in (MeV) unit, the released energy $E_{relased} = |\Delta E|$ during the disintegration of chlorine 36.

0,75 **4.** A sample of volume V, of a surface water, contains N_0 nucleus of chlorine 36. A sample of the same volume V, stemmed from a phreatic table contains 38% of the number of nucleus of chlorine 36 found in the surface water.

Determine, in unit (years), the age of the phreatic table.

Exercise 2 (5,5 points): RL dipole – RLC series circuit

The capacitor, the coil and the ohmic conductor are electronic components whose behaviour differ according to their electric circuits. The capacitor and the coil are reserves of energy while the ohmic conductor has a different role in the energetic balance of these circuits.

This exercise aims at:

- **Studying the charge of a capacitor;**
- **Studying the free electric oscillations in RLC series circuit.**

The electric circuit in figure (1) contains a generator of electromotive force E, an adjustable ohmic conductor of resistance R, a capacitor of capacity C, a coil $(L;r)$ and two switches K_1 and K_2.

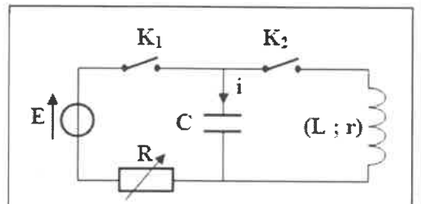

Figure (1)

1 We adjust the resistance on the value $R = 100\Omega$ and we turn-on K_1 at $t_0 = 0$, and we leave K_2 off.

0,75 **1.1** Establish the differential equation verified by the voltage $u_C(t)$ between the terminals of the capacitor.

1.2 An acquisition system permit to obtain the curves in figure (2) which represent $u_C(t)$ and $u_R(t)$ the voltage on the terminals of the capacitor and the ohmic conductor.

0,5 **1.2.1.** Identify the corresponding curve to $u_C(t)$.

0,5 **1.2.2.** Determine graphically the value of:

a. the time constant τ.

b. the electromotive force E.

0,25 **1.2.3.** Verify that $C = 50\ \mu F$.

0,5 **1.2.4.** Determine the maximal value I_0 of the current.

0,75 **1.2.5.** The solution of the differential equation of question **(1.1)** is written as: $u_C(t) = E.\left(1 - e^{-\frac{t}{\tau}}\right)$

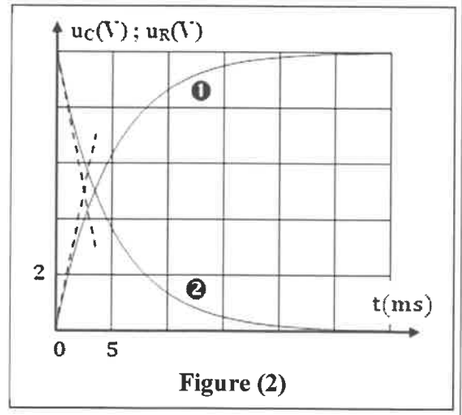

Figure (2)

Copy on your answer sheet the number of the question and write the letter corresponding to the right option (A, B, C or D).

The expression of the current $i(t)$ is:

A	$i(t) = 0,1.e^{-200.t}$	**B**	$i(t) = 0,1.e^{-\frac{t}{200}}$	**C**	$i(t) = 0,1.(1 - e^{-200.t})$	**D**	$i(t) = 0,1.e^{-10.t}$

0,25 **1.2.6.** How can you proceed to charge

2. When the capacitor is fully charged

Using the same acquisition system, w

curve of figure (3) which represents u_C

0,25 **2.1.** Give the name of the oscillating

the curve in figure (3).

0,75 **2.2.** Determine the value of the induct

suppose that the pseudo-period T is eq

natural period of the oscillating syster

$(\pi^2 = 10)$.

2.3. We note respectively $\mathscr{E}_{e0}$ and $\mathscr{E}_{e1}$

energies stored in the capacitor at $t_0 =$

0,5 **2.3.1.** Determine the values of $\mathscr{E}_{e0}$ and

0,5 **2.3.2.** Calculate $\Delta\mathscr{E}$ the variation of

of the circuit between $t_0 = 0$ and $t_1 =$

results.

Exercise 3: (5points) Study the moti

The recti linear, planar and oscillati
nature of the mediums where they o
This exercise aims at:
- **Study ing the motion of a skier s**
- **Study ing the motion of a solid su**

Part 1: Study of the motion of a skie

The skier walks up to a horizontal plan
the skier and his accessories by a solid
and inertia centre G.

1. The motion of the solid (S) in the p
friction equivalent to a unique force $\vec{f}$
the opposite direction of the vector vel
To study the motion of (S) in the traje
choose a frame of reference $(O,\vec{i})$ link
G in A as origin of dates $t_0 = 0$. We t
frame of reference. At $t_0 = 0$, $x_G = x_0$

Data: $f = 70\ N$; $m = 70\ kg$;

0,75 **1.1** Applying Newton's law, establish

0,5 **1.2** Determine the nature of motion of

0,5 **1.3** The skier passes to A with a velocit
Show that the skier cannot avoid the fa

2. The skier pass to B with a horizonta
height $h = BC = 3,2\ m$ of the plane AI
$x_P = 16,48\ m$ in the frame of referenc

$t) = V_B.t$ and $y_G(t) = \frac{1}{2}g.t^2$

und at P.

d try on the same plane AB. He passes by B

nine the value of the velocity V'_B.

jointed
e centre

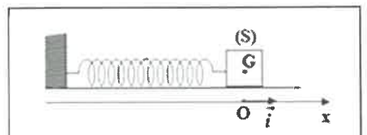

Figure (2)

ure(2)).
X_m and
of G is

$(m.s^{-1})$

Pa l period T_0 of the oscillations, the value of

ed by the spring on the solid (S) at an