★

# الامتحان الوطني الموحد للبكالوريا
## المسالك الدولية – خيار أنجليزية
## الدورة العادية 2018
## -الموضوع-

NS28E

المملكة المغربية
وزارة التربية الوطنية والتكوين المهني والتعليم العالي والبحث العلمي

المركز الوطني للتقويم والامتحانات والتوجيه

| | | | |
|---|---|---|---|
| المادة | الفيزياء والكيمياء | مدة الإنجاز | 3 |
| الشعبة أو المسلك | شعبة العلوم التجريبية : مسلك العلوم الفيزيائية – خيار أنجليزية | المعامل | 7 |

***The use of non-programmable scientific calculator is allowed***

***This exam paper consists of four exercises***

**Literal expressions should be given before doing numerical calculations**

**EXERCISE I ( 7 points ):**
- Electrolysis of an ionic compound: lead bromide
- Study of lactic acid reactions

**EXERCISE II ( 2,5 points ):**
- Determining propagation speed of an ultrasonic wave in a liquid

**EXERCISE III ( 5 points ):**
- Experimental determination of the capacitance of a capacitor
- Study of RLC series circuit

**EXERCISE IV ( 5,5 points ):**
- Study of the vertical fall motion of a marble (small ball) in a viscous liquid
- Energetic study of an oscillating system (solid-spring)

## EXERCISE I (7 points)

Marking scale

**Part one and part two are independent**

### Part one: Electrolysis of an ionic compound: lead bromide

We carry out the electrolysis of lead bromide $Pb^{2+} + 2\,Br^-$ at high temperature using a power supply delivering an electric current whose intensity I is constant.

During this electrolysis, lead metal is deposited at one electrode and bromine gas is released at the other electrode.

For 1 hour ($\Delta t = 3600\,s$) of this process the mass m=20,72g of lead is formed.

**Given:**

- The two redox pairs involved in the reaction are $Pb^{2+}/Pb_{(s)}$ and $Br_{2(g)}/Br^-$ ;
- Faraday constant: $F = 9{,}65.10^4$ C.mol$^{-1}$ ;
- Molar volume of gases: $V_m = 70{,}5$ L.mol$^{-1}$ for this experiment;
- Molar mass of lead: $M(Pb) = 207{,}2\,g.mol^{-1}$.

**0,25** **1.** What is the name of the electrode (anode or cathode) at which bromine is released?

**0,75** **2.** Write the half-equation of the reaction occurring at each electrode, and the overall equation.

**0,5** **3.** Determine the value of I flowing through the circuit during the time Δt.

**0,5** **4.** Calculate the volume V of bromine gas released during Δt from this experiment.

### Part two: Study of lactic acid reactions

*2-hydroxypropanoic acid commonly called lactic acid is an organic acid involved in many biochemical reactions. It is found in milk, its derivatives, many fruits and vegetables. It can be used as an additive agent of foods and in preparation of pharmaceutical skin products.*

*This part aims at studying the reaction between lactic acid and sodium hydroxide, and that between lactic acid and an alcohol.*

#### 1. Study of the reaction between lactic acid and sodium hydroxide

**Given:**

- All measurements are made at 25°C;
- The structural formula of the lactic acid is $CH_3 - CH(OH) - COOH$ which denoted $AH$ and its conjugate base $A^-$ ;
- The acid dissociation constant of the acid-base pair $AH_{(aq)}/A^-_{(aq)}$ is $K_A = 10^{-3,9}$ ;
- pH ranges of some acid-base indicators:

| Acid-base indicator | Helianthine | Bromothymol blue | Cresol red |
|---|---|---|---|
| pH range | 3 – 4,4 | 6 – 7,6 | 7,2 – 8,8 |

A volume $V_A = 15\,mL$ of an aqueous solution ($S_A$) of the lactic acid $AH$ of molar concentration $C_A$ is titrated with an aqueous solution ($S_B$) of sodium hydroxide of molar concentration $C_B = 3.10^{-2}\,mol.L^{-1}$ by pH measurements.

The following curve represents the variation of pH of the mixture as a function of the volume $V_B$ of the solution ($S_B$) added over this titration.

**0,5** **1.1.** Write the equation of the chemical reaction occurred during this titration.

**0,5** **1.2.** Determine the coordinates $V_{BE}$ and $pH_E$ of the equivalence point.

**0,5** **1.3.** Calculate the molar concentration $C_A$ of the solution ($S_A$).

**0,5** **1.4.** Which acid-base indicator is the suitable from the suggested for this titration? Justify your answer.

**0,75** **1.5.** Calculate the ratio $\frac{[A^-]}{[AH]}$ when the volume $V_B = 10\,mL$ of solution ($S_B$) is added then deduce which chemical specie $AH$ or $A^-$ is predominant.

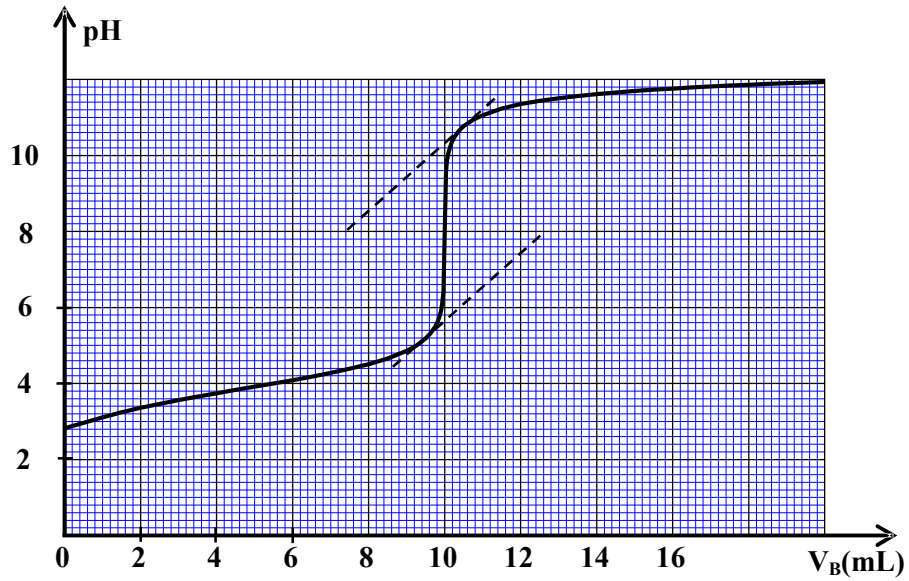


**2. Study of the reaction between lactic acid and methanol**

An amount $n_0 = 10^{-3}\,mol$ of lactic acid $CH_3 - CH(OH) - COOH$ is mixed in a flask with an amount $n_0 = 10^{-3}\,mol$ of pure methanol $CH_3 - OH$. The reaction mixture is heated under reflux for a period of time. At the end of the reaction, we obtain an amount $n_E = 6.10^{-4}\,mol$ of an ester E.

**0,5** **2.1.** State two characteristics of the occurred reaction.

**0,5** **2.2.** Suggest two kinetic factors to speed up the esterification reaction.

**0,5** **2.3.** Using the structural formulae, write the equation of the reaction occurring between lactic acid and methanol.

**0,75** **2.4.** Calculate the yield **r** at the final state.

## EXERCISE II (2,5 points)

**Determining propagation speed of an ultrasonic wave in a liquid**

Mechanical waves travel only in material mediums. They propagate faster in material medium which has high relative density.

To determine the approximate value $V_p$ of the propagation speed of an ultrasonic wave travelling in petroleum (liquid) we carry out the following experiment:

Two transmitters $E_1$ and $E_2$ are connected to a low frequency generator (LFG), they are fixed on a side of a tank containing petroleum. At the same instant of time $t = 0$, $E_1$ and $E_2$ send two ultrasonic waves, one travels in the air and the second travels in the petroleum. On the other side of the tank, we fixed two receivers $R_1$ and $R_2$.

The receiver $R_1$ captures the ultrasonic wave which travels in the air, and the receiver $R_2$ captures the wave that travels in the petroleum.

We visualize on the oscilloscope screen the two received signals by $R_1$ and $R_2$. (see figure2)

**Given:**

-The two waves travel same distance $L = 1,84\,m$ ;

-The propagation speed of ultrasonic waves in the air is $V_{air} = 340\,m.s^{-1}$ ;

-The time-base (horizontal sensitivity) on the oscilloscope is set at $2ms/div$ .

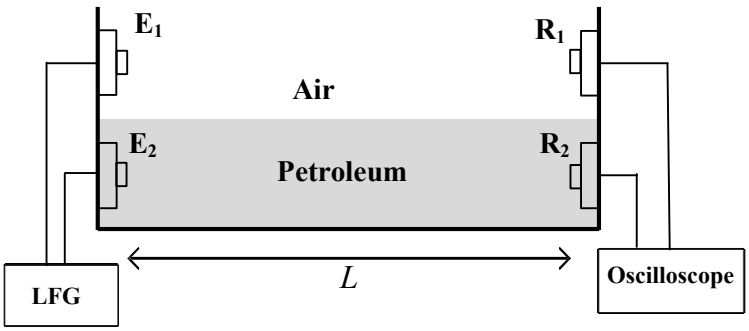


Figure 1

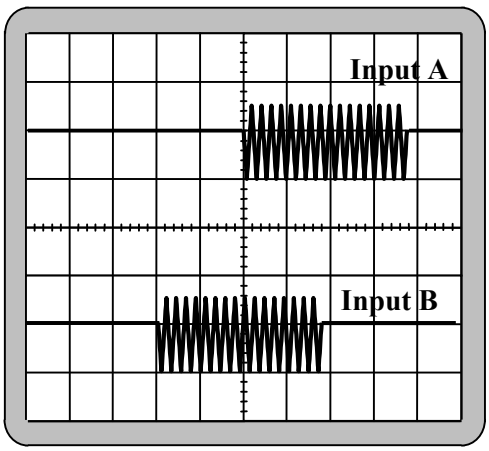


Figure 2

**0,5** **1.** Is the ultrasonic wave longitudinal or transverse? Justify your answer.

**0,5** **2.** Using figure 2, determine the time delay $\tau$ between the two received waves.

**0,75** **3.** Show that : $\tau = L.(\frac{1}{V_{air}} - \frac{1}{V_p})$

**0,75** **4.** Calculate the approximate value of $V_p$ .

## EXERCISE III (5 points)

A teacher devoted with his students a practical work session to determine capacitance of a capacitor by two different experimental methods and to study a RLC series circuit.

**I-Experimental determination of the capacitance of a capacitor**

**1- By using an ideal generator of current**

The teacher instructed a team of students to perform the experimental set-up of the circuit shown in figure 1 which consists of:

- an ideal generator of electric current $I_0$ ;
- a resistor of resistance R ;
- two capacitors ($c_1$) and ($c_2$) in parallel, the first one of capacitance $C_1 = 7,5\,\mu F$ and the second one of unknown capacitance $C_2$ ;
- a switch K.

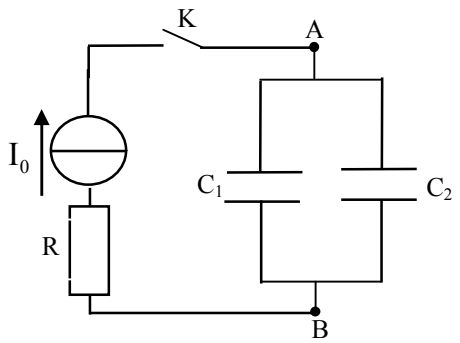


**Figure 1**

A student switches on the circuit at t=0. Using a datalogger, the obtained curve represents the variation of the total charge q of the equivalent capacitor of ($c_1$) and ($c_2$) as a function of the voltage $u_{AB}$ (see figure 2)

**0,5** **1.1-** What is the interest from connecting capacitors in parallel?

**0,75** **1.2-** By investigating the curve in figure 2, determine the value of the total capacitance $C_{eq}$ of the two capacitors.

**0,5** **1.3-** Deduce the value of $C_2$.

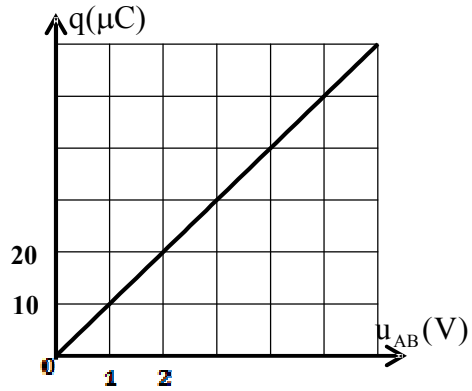


**Figure 2**

**2- By studying the RC dipole response to a step voltage**

A second team of students performs the experimental set-up of the circuit shown in figure 3, it consists of:

-an ideal power supply of electromotive force E;
-a resistor of resistance $R = 1600\Omega$ ;
-the previous capacitor of capacitance $C_2$ ;
-a double switch K.

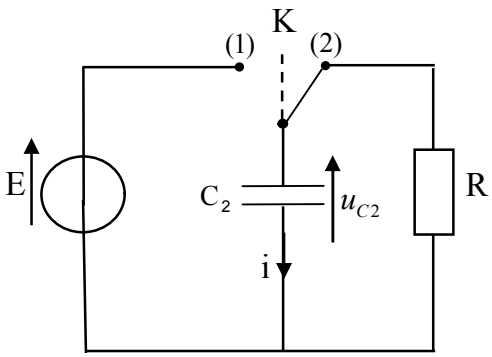


**Figure3**

When the capacitor is fully charged, a student puts the switch K in position (2) at t=0.
Using a datalogger, the obtained curve represents the variation of the voltage $u_{C_2}(t)$ between terminals of the capacitor (figure 4, next page).

**0,5** **2.1-** Find out the differential equation for the voltage $u_{C_2}(t)$ during discharging the capacitor.

**0,5** **2.2-** The solution of this differential equation is $u_{C_2}(t) = E.e^{-\frac{t}{\tau}}$. Find out the expression of the time-constant $\tau$ in terms of $C_2$ and R.

**0,5** **2.3-** Determine again the value of $C_2$.

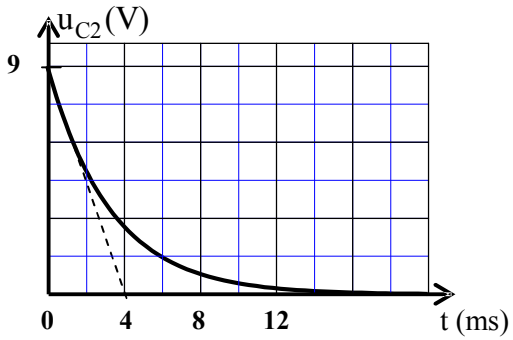

**Figure 4**

**II-Study of RLC series circuit**

A student performs the experimental set-up of the circuit shown in figure 5, it consists of :

-a capacitor fully charged of capacitance $C = 2,5\,\mu F$ ;

-an inductor of inductance L and internal resistance r;

-a switch K.

After switching on the circuit, and by using a datalogger, underdamped oscillations of the capacitor's charge q(t) are displayed.

**0,25** **1.** Explain why the obtained oscillations are underdamped.

**2.** The underdamped oscillations are maintained by setting up in series in the previous circuit a generator delivering a voltage which is proportional to current intensity where $u_G(t)=k.i(t)$.

**0,5** **2.1.** Find out the differential equation for q(t) the charge of the capacitor.

**0,25** **2.2.** When $k = 5$ (S.I) the oscillations become sinusoidal, determine the value of r.

**0,75** **2.3.** Using the curve in figure 6, determine the value of L.

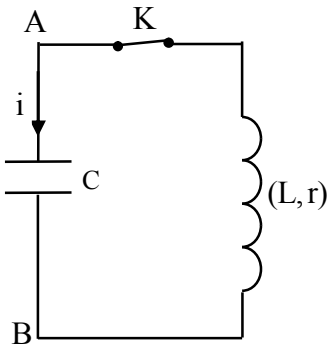

**Figure 5**

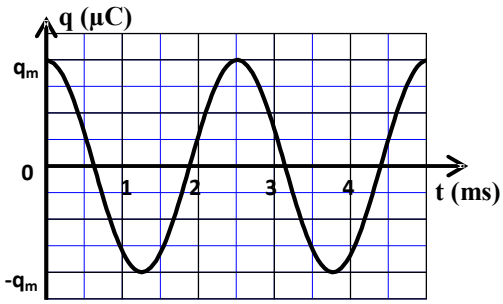

**Figure 6**

## EXERCISE IV (5,5 points)

**Part one and part two are independent**

**Part one: Study of the vertical fall motion of a marble in a viscous liquid**

To determine some characteristics of the fall motion of a marble (small ball) in liquid, we perform the following experiment:

We fill in a graduated tube with a transparent viscous liquid of density $\rho$. Inside this tube, we release without initial speed a homogenous marble of mass $m = 2.10^{-2}\ kg$ and volume V, its centre of inertia is G.

We study the motion of the centre of inertia G of the marble in a frame of reference $(O,\vec{j})$ assumed Galilean.

We locate the position of G at an instant of time t by the ordinate y on the downward y-axis $\overrightarrow{Oy}$ (figure 1).

At the origin of time t=0, the position of G coincides with the origin of $\overrightarrow{Oy}$. We consider that the upthrust force $\vec{F}_a$ (Archimedes' force) is not negligible compared with the other forces acting on the marble.

We model the viscous frictional force by $\vec{f} = -k.\overrightarrow{v_G}$ where $\overrightarrow{v_G}$ is the speed of G at an instant t and k is a positive constant.

The magnitude of the upthrust force is equal to the weight of the displaced liquid $F_A = \rho.V.g$ where g is the strength of the gravitational field.

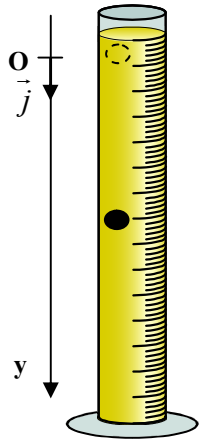

**Figure 1**

To determine the instantaneous speed of G, we use a camera and appropriate software. The treatment of the experimental data permits to obtain the curve shown in figure 2 which represents the variation of the speed $v_G$ as a function of time t.

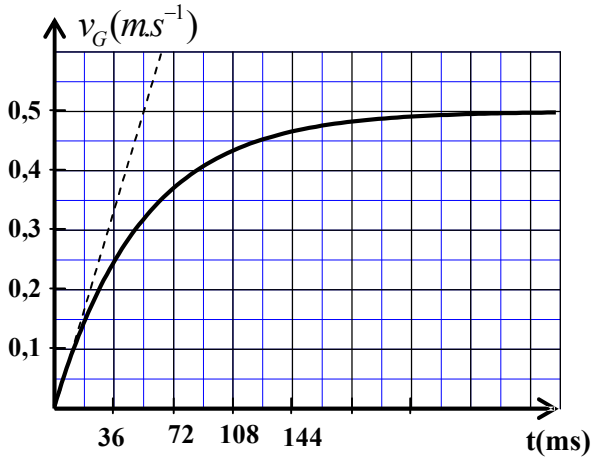

**Figure 2**

**1** **1.** By applying Newton second law, show that the differential equation of the motion of the centre of inertia G of the marble, is written as: $\frac{dv_G}{dt} + \frac{1}{\tau}v_G = A$ then determine the expression of $\tau$ the characteristic time in terms of k and m and that of A in terms of g, m, $\rho$ and V.

**0,5** **2.** Determine graphically the value of the terminal speed $v_{G_{lim}}$ and $\tau$.

**1** **3.** Find the values of k and A.

**1** **4.** The differential equation of the motion of G is written as: $\frac{dv_G}{dt} = 9,26 - 18,52.v_G$.

Calculate the approximate values of $a_3$ and $v_4$ by using Euler's method and data of the following table:

| t (s) | $v_G$ ( m.s$^{-1}$) | $a_G$ (m.s$^{-2}$) |
|---|---|---|
| ⋮ | ⋮ | ⋮ |
| 0,015 | 0,126 | $a_3$ |
| 0,020 | $v_4$ | 6,28 |
| 0,025 | 0,192 | 5,70 |

**Part two : Energetic study of an oscillating system (solid-spring)**

We model a piece of a mechanical machine by an oscillating system (S) consisting of a solid (S) of centre of inertia G and of mass m attached to one extremity of a horizontal spring with non-contiguous turns of spring constant $K = 35\,N.m^{-1}$ and its mass is negligible. The other extremity is attached to a fixed stand.

We displace the solid (S) by a distance $X_m$ from its position of equilibrium then we release it without initial speed. The solid oscillates on a horizontal plane without friction.

We study the motion of the centre of inertia G in a Galilean frame of reference $(O,\vec{i})$ linked to the Earth.

At equilibrium, the position of G coincides with O the origin of the frame $(O,\vec{i})$.

We locate the position of G at one instant of time t using the displacement x (abscissa) in the frame $(O,\vec{i})$.(figure 3)

We assume that the elastic potential energy to be zero when the centre of inertia G at the position of equilibrium (x=0).

The equation of the displacement-time of G is written as $x(t) = X_m.\cos(\frac{2\pi t}{T_0} + \varphi)$ .

The curve in figure 4 represents the displacement-time $x(t)$.

**0,75** **1-** Determine the values of $X_m$ , $T_0$ and $\varphi$ .

**0,5** **2-** Find the value of the elastic potenial energy $E_{pe1}$ of the oscillating system at the instant $t_1 = 0,5\,s$ .

**0,75** **3-** Calculate the work $W_{AB}(\vec{F})$ of the restoring force applied by the spring on the solid (S) when its centre of inertia G moves from position A ( $x_A = X_m$ ) to position B ( $x_B = -X_m$ ).

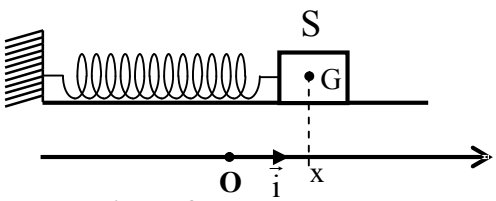

**Figure 3**

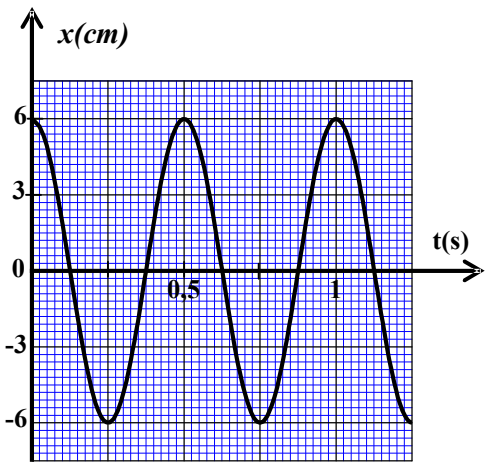

**Figure 4**